ZKTeco

C3-400 Installation Instructions and Connection Guide

Version: 1. 2 Date: Jan. 2014

1. Cautions

⚠ Please note the following cautions. Mis-operation may lead to personal injury or equipment failure:

1) Do not energize the system before installation is complete; never carry out installation activities when the system is energized.

2) All peripheral devices must be grounded.

3) The conduits of wires under relay must be matched with metaled conduits, other wires can use PVC conduits.

4) It is strongly recommended that the length of exposed part of any connection cable should not be longer than 4 mm. Professional clamping tools may be used to avoid unintentional contact of exposed wires to avoid short-circuit or communication failure.

5) It is recommended that card readers and buttons be installed at height of 1.4m-1.5m above ground.

6) It is recommended to use the power supply for control panel, and external power supply for each lock.

7) The appliance shall be installed and wired in accordance with national electrical code and by qualified personnel only.

Description of normal working state:

Connect the system to the power supply. If the system works properly, the POWER indicator (red) is lit constantly and the RUN indicator (green) flashes.

Valve regulated lead-acid battery:

Constant voltage charge voltage regulation
Cycle use : 14.5V~14.9V(25)
Initial current: less than 2.88A
Standby use: 13.6V~13.8V(25)
Capacity: 12V, 7.2Ah/20hr,
Battery Type: LC-RA127R2T1

Caution:

Do not charge in a gas tight container.
Do not short the battery terminals.
Do not incinerate
Flush with water at once if contact is made with electrolyte (Acid)
Do not attempt to disassemble the battery.

2. Fixed and Installation

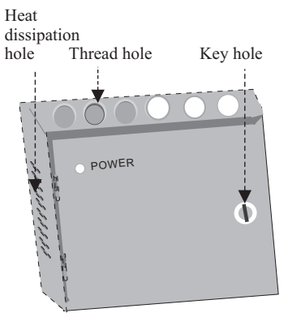

❶ Get through the thread hole

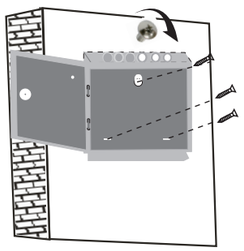

❷ Fixed case

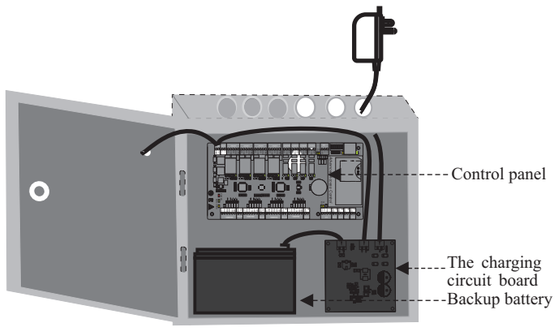

❸ Wiring the Control Panel, The Charging Circuit Board and Backup Battery

4. LED Indicators, Wires, Auxiliary Input And Output

Notes:

1)Meaning of LED indicators:

LINK indicator(green): always(green) indicates TCP/IP communication is proper;
ACT indicator(yellow): flashing indicates data is in transmitting through TCP/IP communication.
TX indicator(yellow): flashing indicates it is sending data through RS485 communication.
RX indicator(green): flashing indicates it is receiving data through RS485 communication.
Auxiliary output indicator(green):always(green) indicates it is in use.
Lock indicator(green):always(green) indicates lock is open.
POWER indicator(red):always(red) indicates control panel is power on.
RUN indicator(green):its flashing indicates the system works normally.
CARD indicator(yellow):its flashing indicates card is punched on reader.

2) Recommended use of wires:

A Use 2-conducotor power cord
B Use 6-conductor wire between wiegand reader and control panel (RVVP 6*0.5mm) (Choose the approrciate cord for the interface you connect, such as 6,8,10 cord.)
C Use 4-conducotor lock power cord (RVV 4*0.75mm)
D Use 2-conducotor switch power cord (RVV 2*0. 5mm)

3) The auxiliary input may be connnected to infrared body detectors, alam switches,etc.

4) The auxiliary output may be connected to door bells,alarms,etc.

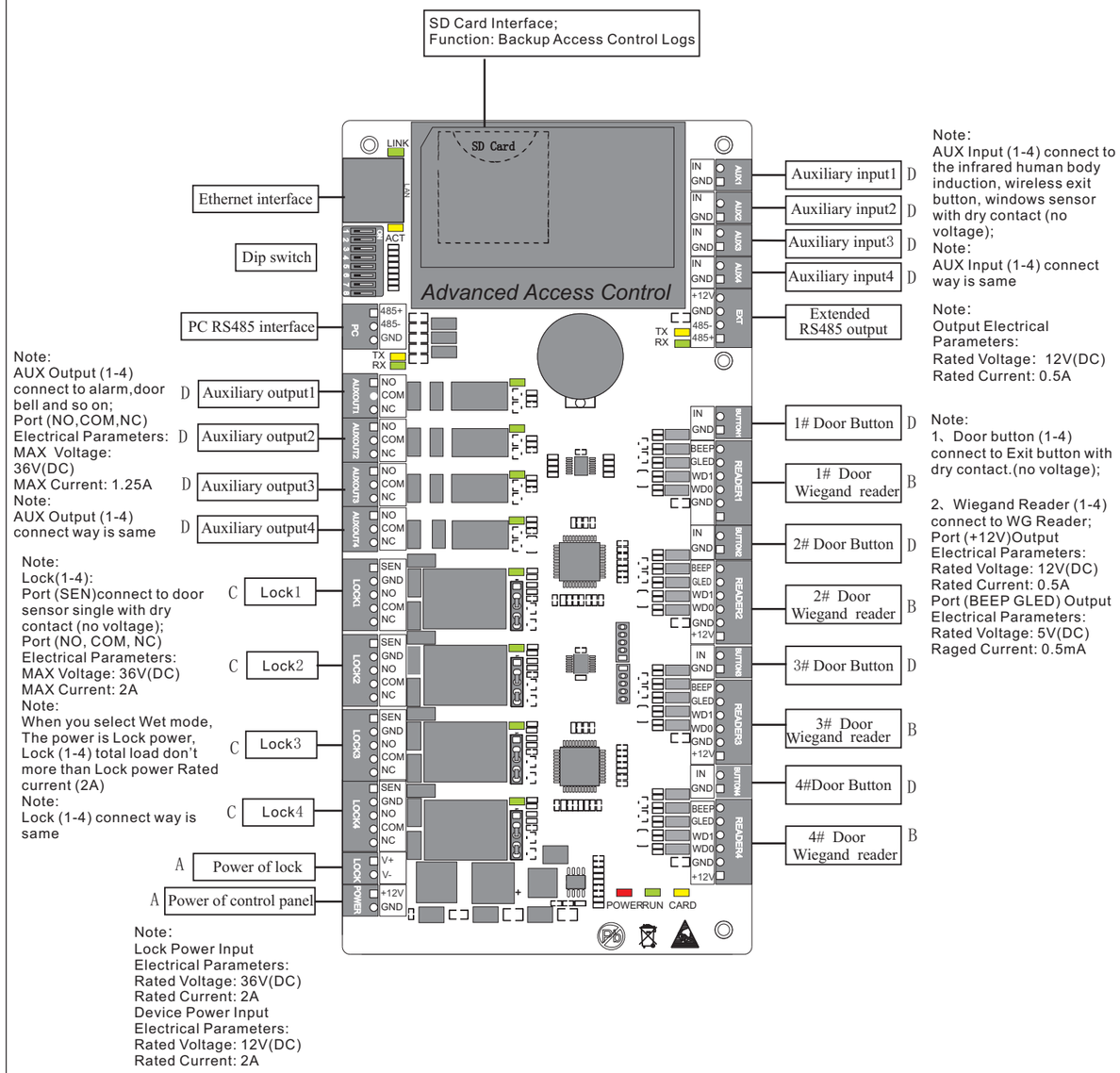

5. RS485 Address Setting, Restore Factory Setting, Terminal Resistance Setting

Set RS485 address through DIP switch:

1) Place 1-6 on DIP switch are for setting the number of control panels when communicating through RS485, it is adopted for binary coding, and little endian, the address represented by place 1-6 are shown as figurue(5-1).

2) Before setting the address, please keep the system power off. Jump place 1-6 to desired status. The address number cannot be the same as another one in the network. For example: to set the device number as 39 (39=1+2+4+32), the corresponding RS485 code is 111001, then Jump place 1,2,3 and 6 at "ON" status.

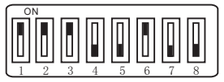

3) Place 7 is for restoring factory default settings. Jump it for three times within 10 seconds and restart the system. All information in control panel RAM will be cleared and the system restores factory default settings.

4) Place 8 is for setting terminal resistance when communicating through RS485. Jump it at "ON" status, then it is equivalent to having a terminal resistance of 120 ohm between 485+ and 485-.

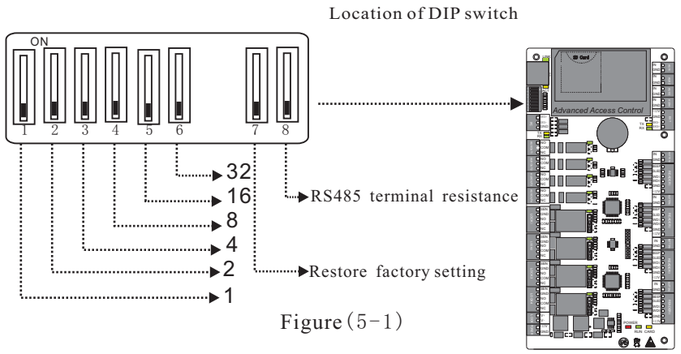

Figure (5-1)

6. Connection Of Lock

1) Control panel provides lock control output interfaces. For NO lock ,it is open when power is on, and closed when power is off, so COM and NO interfaces should be used; For NC lock, it is open when power is off, and closed when power is on, so COM and NC interfaces should be used.

2) Control panel supports "dry mode" and "wet mode" by setting the jumper, it is "wet mode" when connecting "V+ V-" Input interfaces to supply power for locks, please shorten 2-3 and 4-5 . Equipment factory default setting is dry mode. For setting "dry mode" and "wet mode", please refer to <<C3-100/200/400 access control panel installation instructions>>.

3) When the Electrical Lock is connected to the Access Control System, you need to parallel one FR107 diode (equipped in the package) to prevent the self-inductance EMF affecting the system, do not reverse the polarities.

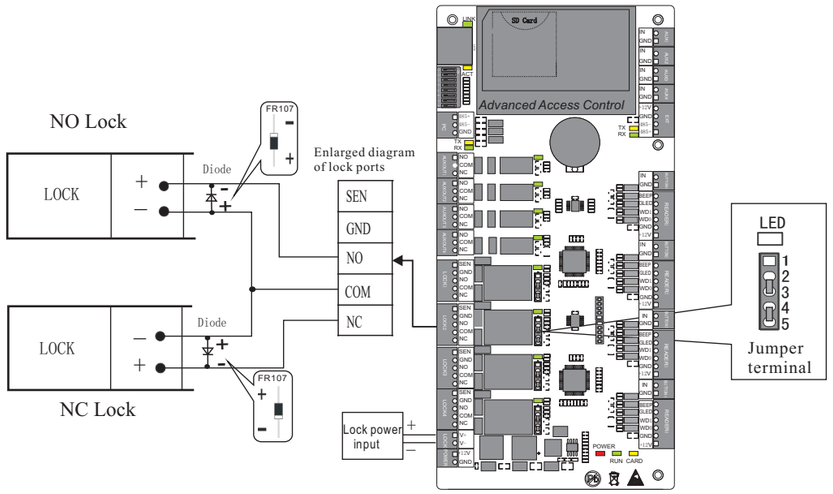

"Wet mode" wiring diagram of lock connecting with external power supply.

7. Equipment Communication

⚠ The background PC software is able to communicate with the system according to two protocols(RS485 and TCP/IP) for data exchange and remote management. The communication cable should be as far away from high-voltage lines as possible. Do not keep the communication cable in parallel with power cords or bind them together.

1. TCP/IP Communication

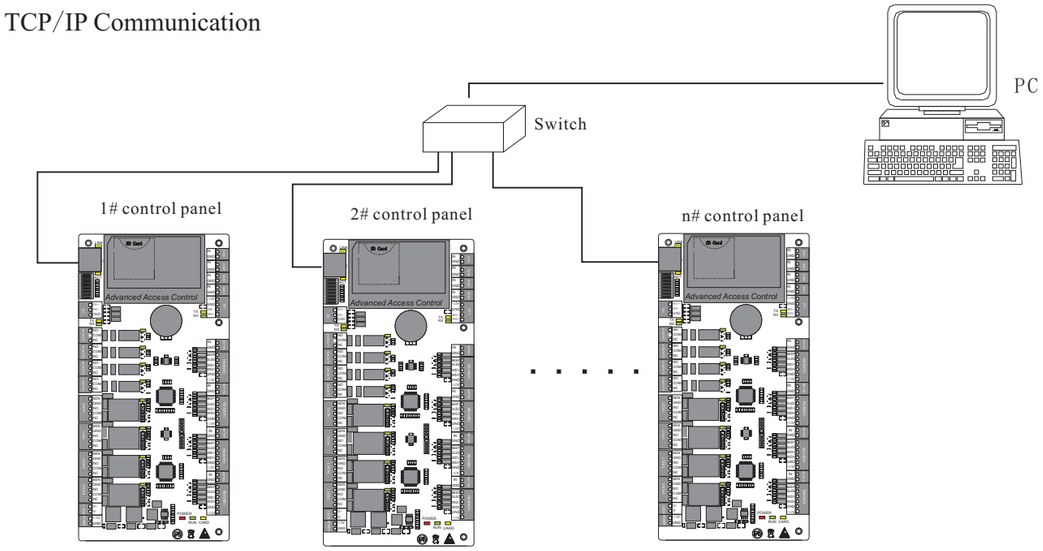

2. RS485 Communication

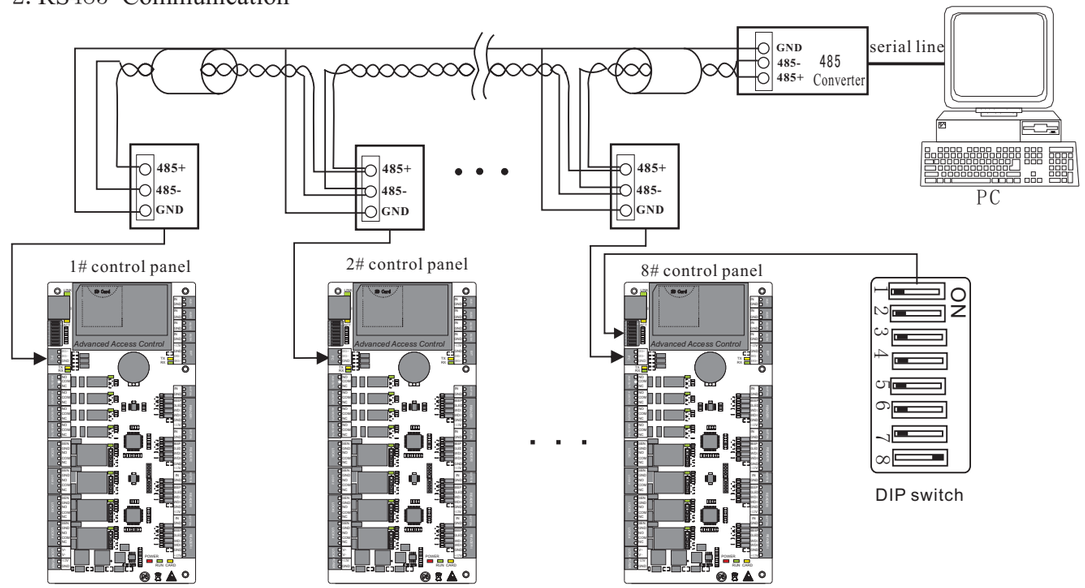

Notes:

1) Internationally accepted RVSP(shielded twisted-pair) wires should be used for communication to effectively avoid interference. RS485 communication wires should be connected by means of bus cascade connection.

2) Considering stability of communication, it is recommended the length of RS485 bus is less than 600m

3) One RS485 BUS may hold 63 control panel units, but it is not recommended to connect with more than 32 units access control panels..

4) To enhance the stability of communication when the bus is longer than 300m, it is necessary to keep place 8 of DIP switches of the first and the last control panel at "ON" status. As shown in the figure above, place 8 of the DIP switches of units 1# and 8# is placed at "ON 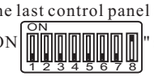 " status.